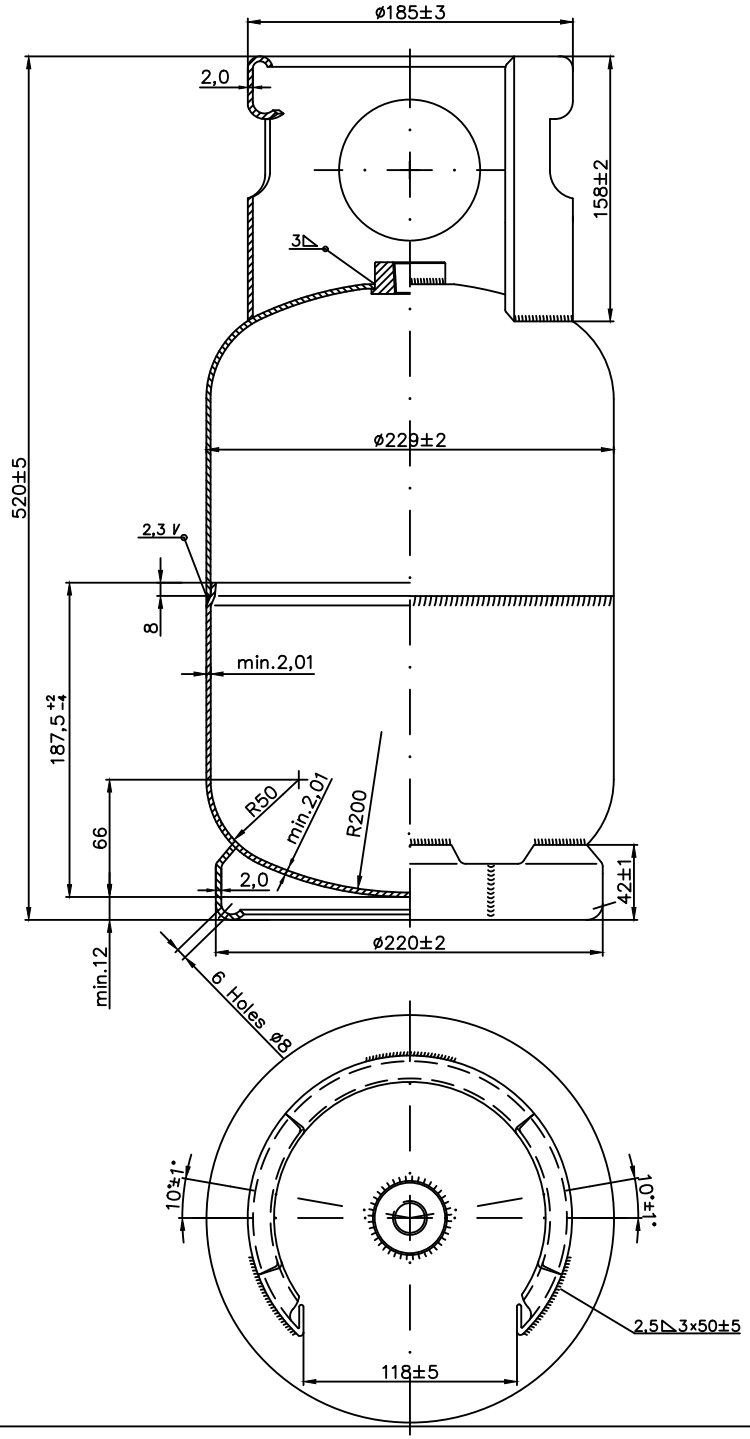

MARKING ON THE COLLAR

XXE PL P XXXXX
PH48BAR X,XX KG 12,5L 2,01MM
un ISO4706S CZ 10 17 YYYY/MM
1017

BUNG 2:1

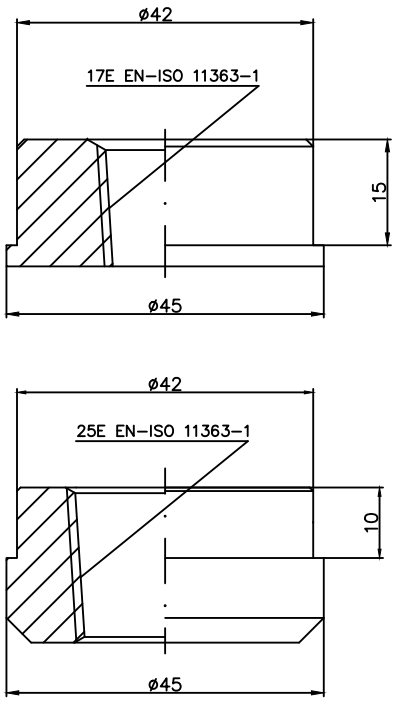

SPECIFICATION OF CYLINDER

Test pressure.....48 bar
Water capacity.....12,5+5% L
Weight without a valve.....ca 8,0 kg

Heat treatment: Annealing

Material : P310NB n. EN 10120:2011

Tensile strength 460÷550 N/mm²
Yield strength min. 310 N/mm²
Elongation $L_0=80$ for 460<Rm≤520–mind 19%
for 520<Rm≤550–mind 15%

Surface:

1) Powder painted (Polyester)

Official certification

Remarks:

1. Approved and produced according to ISO 4706:2008. +A1:2008, TPED 2010/35/EU and ADR/RID 2017
If required. Approved and produced according to ISO 4706:2008 and IMDG 2010
2. The conformity approval according to directive 2010/35/EU for this cylinder is done basis on the general design drawing No B-6-5-10-3-2-S rev.1

Method of welding: 135 (MAG)
Shielding gas: M21 PN-EN 14175

Drawing	P.Poskuta	P.Poskuta	24.09.21	Vitkovice Milmet	Scale 1:2 2:1
Checked	A.Więcławek		24.09.21		
Accepted	M.Stępień		24.09.21		
WELDED STEEL GAS CYLINDER 12,5 L				DRG No R0-6-5-10-3-4	rev.17